DI1H5–16

| DTC | C1231 / 31, C1335 / 35 | Steering Angle Sensor Circuit |
|---|---|---|

## CIRCUIT DESCRIPTION

| DTC No. | DTC Detecting Condition | Trouble Area |
|---|---|---|
| C1231 / 31 | When ECU IG1 terminal voltage is 9.5 V or more, ECU does not receive data from the steering angle sensor for 1 sec. or more. | • Steering angle sensor<br>• Steering angle sensor circuit<br>• +BI circuit |
| C1335 / 35 | Detection of either condition 1. or 2.:<br>1. When the ECU IG1 terminal voltage is 9.5 V or more, data transmission from the steering angle sensor is impossible for 1 sec. or more.<br>2. Immediately after the terminal BAT is connected and when IG1 terminal voltage is 9.5 V or more, open circuit of terminal TRIG continues for 15 sec. or more. | |

# WIRING DIAGRAM

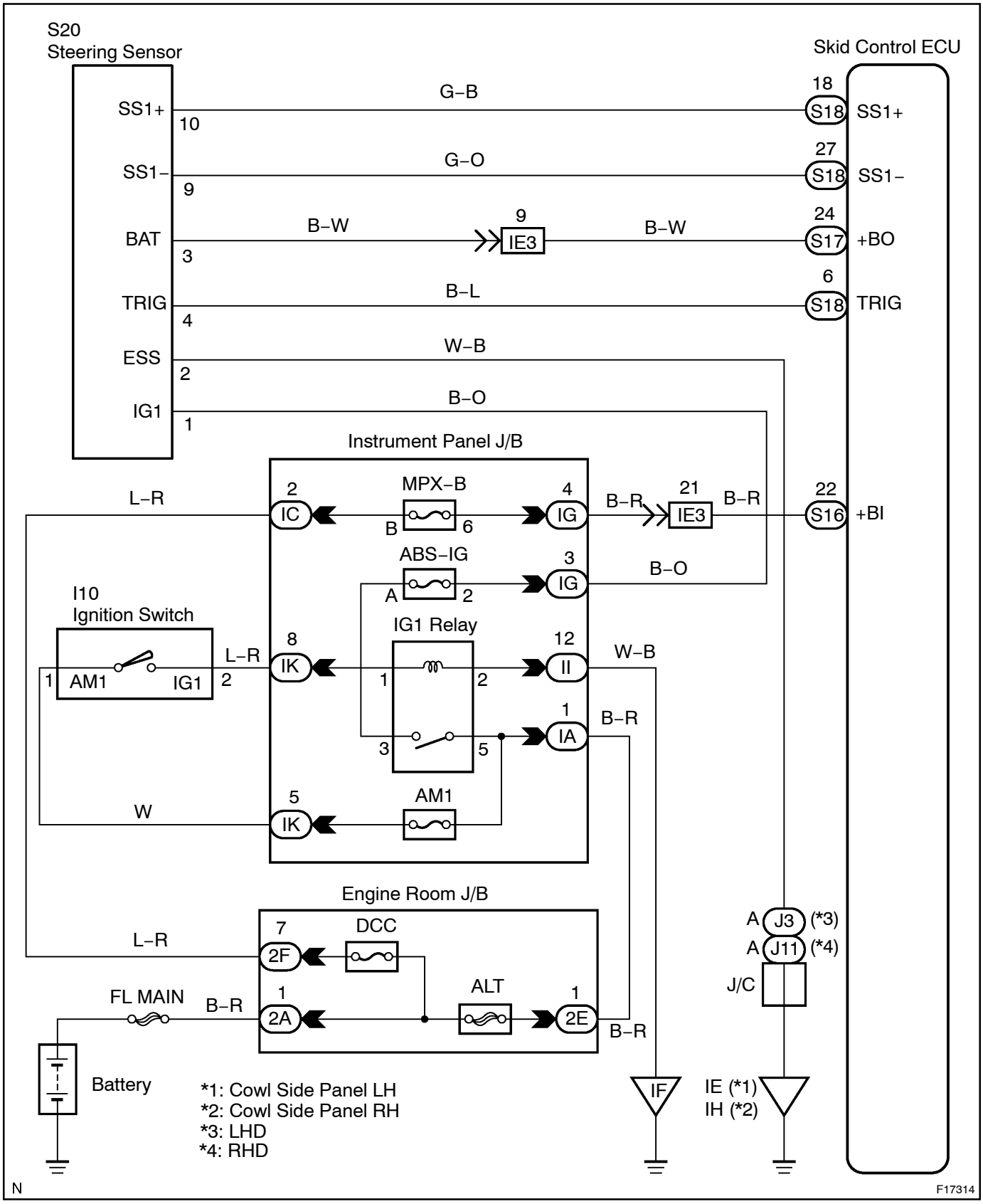

## INSPECTION PROCEDURE

HINT:
Start the inspection from step 1 in case of using the hand–held tester and start from step 2 in case of not using the hand–held tester.

| 1 | **Check output value of the steering angle sensor.** |
|---|---|

**PREPARATION:**
(a) Connect the hand–held tester to the DLC3.
(b) Turn the ignition switch ON and turn the hand–held tester main switch ON.
(c) Select the DATALIST mode on the hand–held tester.

**CHECK:**
Check that the steering wheel turning angle value of the steering angle sensor observed in the hand–held tester is changing as the steering wheel is turned.

**OK:**
**Steering wheel turning angle value must be changing.**

**OK** → **Go to step 5.**

**NG**

| 2 | **Check voltage between terminals +BI and GND of skid control ECU.** |
|---|---|

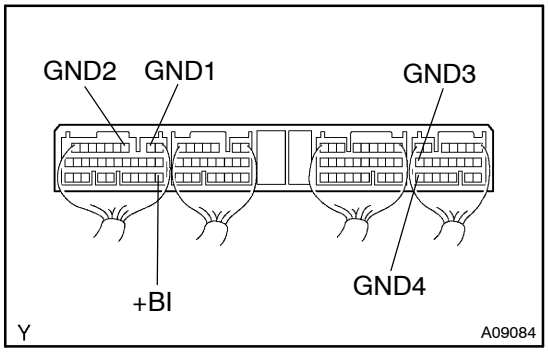


**PREPARATION:**
(a) Remove the skid control ECU with the connector still connected.
(b) Turn the ignition switch ON.
(c) Measure voltage between terminal +BI and GND of skid control ECU.

**OK:**
**Voltage: 10 – 14 V**

**NG** → **Check and replace harness and connector.**

**OK**

| 3 | **Check input voltage of the steering angle sensor.** |
|---|---|

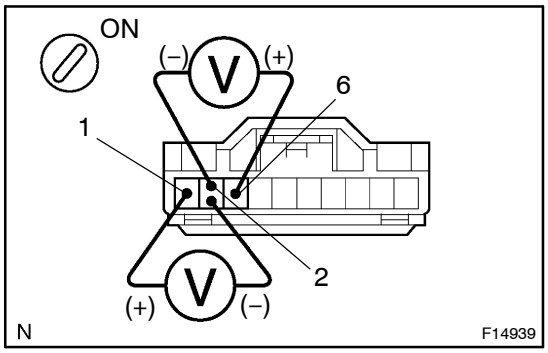


**PREPARATION:**

(a) Remove the steering wheel and column lower cover.

(b) Disconnect the steering angle sensor connector.

**CHECK:**

(a) Turn the ignition switch ON.

(b) Measure voltage between terminals 1 and 2, 2 and 3 of the steering angle sensor harness side connector.

**OK:**

**Voltage: 10 – 14 V**

| NG | **Check and replace harness and connector.** |
|---|---|

**OK**

| 4 | **Check steering angle sensor.** |
|---|---|

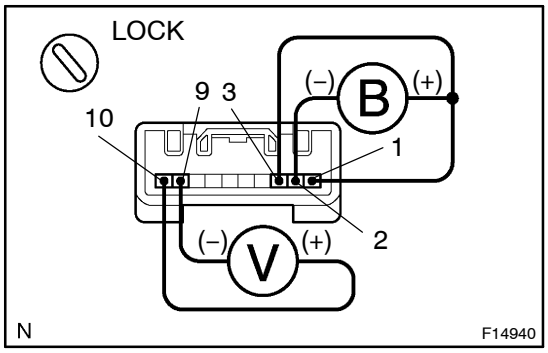


**PREPARATION:**

(a) Apply battery voltage between terminals 1 and 2, 2 and 3 of the steering angle sensor.

(b) Connect the oscilloscope to the terminals 9 and 10 of the steering angle sensor.

**CHECK:**

Turn the steering wheel slowly and check the signal waveform.

**OK:**

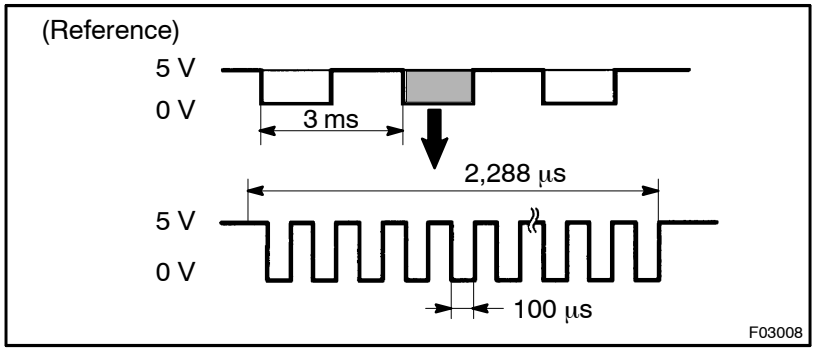


HINT:

The above signal wave form does not repeat ON and OFF regularly and this ON–OFF interval changes case by case according to the data.

NG → **Replace steering angle sensor.**

OK

**Check and replace skid control ECU.**

| 5 | **Check DTC for ABS.** |
|---|---|

NG → **Check and replace skid control ECU.**

OK

**No problem.**